1

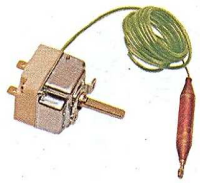

4

8 9

10

Description / Model*		Part number
Spare electrical parts:		
1	Regulation thermostat (RE/LE, RE/L)	WEG01404
2	On/Off switch, orange indicator (RE/LE)	WSX02012
3	Noryl flow switch	WSX03025
4	Safety thermostat 63° (RE/LE)	WIN01641
7	Elec. connection terminals (RE/LE)	WCC01289
9 8	Shunt for switching from three to single phase	WCC01287 WCC01288
10	Contactor DILM 9-10	WCF01066
12 11	Right resistance 3 Kw titanium Cross support	WEG01412 WIB01610
12 11	Right resistance 6 Kw titanium Cross support	WEG01413 WIB01610
12 11	Right resistance 9 Kw titanium Cross support	WEG01414 WIB01610
12 11	Right resistance 12 Kw titanium Cross support	WEG01415 WIB01610
A	Three phase safety thermostat (RE/N, RE/L)	WEG01407
B	Regulation thermostat Bulb 6	WEG01405
C	Pressure switch 153 ml/b	WCE03365
Other		
13	Body RE/L3 and 6 kW	WIB01606
13	Body RE/L9 and 12 kW	WIB01605
19 15	2 1/2 union connections Ø 63/50 (RE/LE)	W40RDL
24 16	Height adjuster Joint	WIB01611 WJW01667
17	Box	WIB01612
14	Split left/right nut	WIB01608

*** For all orders for spare parts please give the serial number of the warmer.**

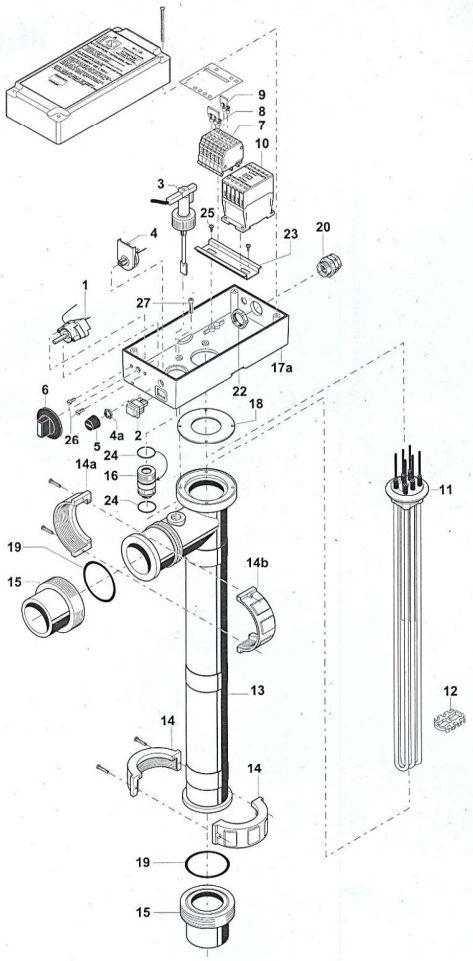

RE/L FITTED

11

A

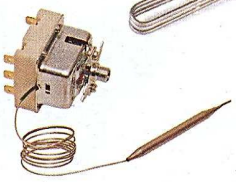

B

C

Ed. 03 du 04 2009